Tagra | SL20 | 19.4x11.2mm | LED Diffuser | Dome | Black | 3M

2016-3M-D-BLK / ITM000942

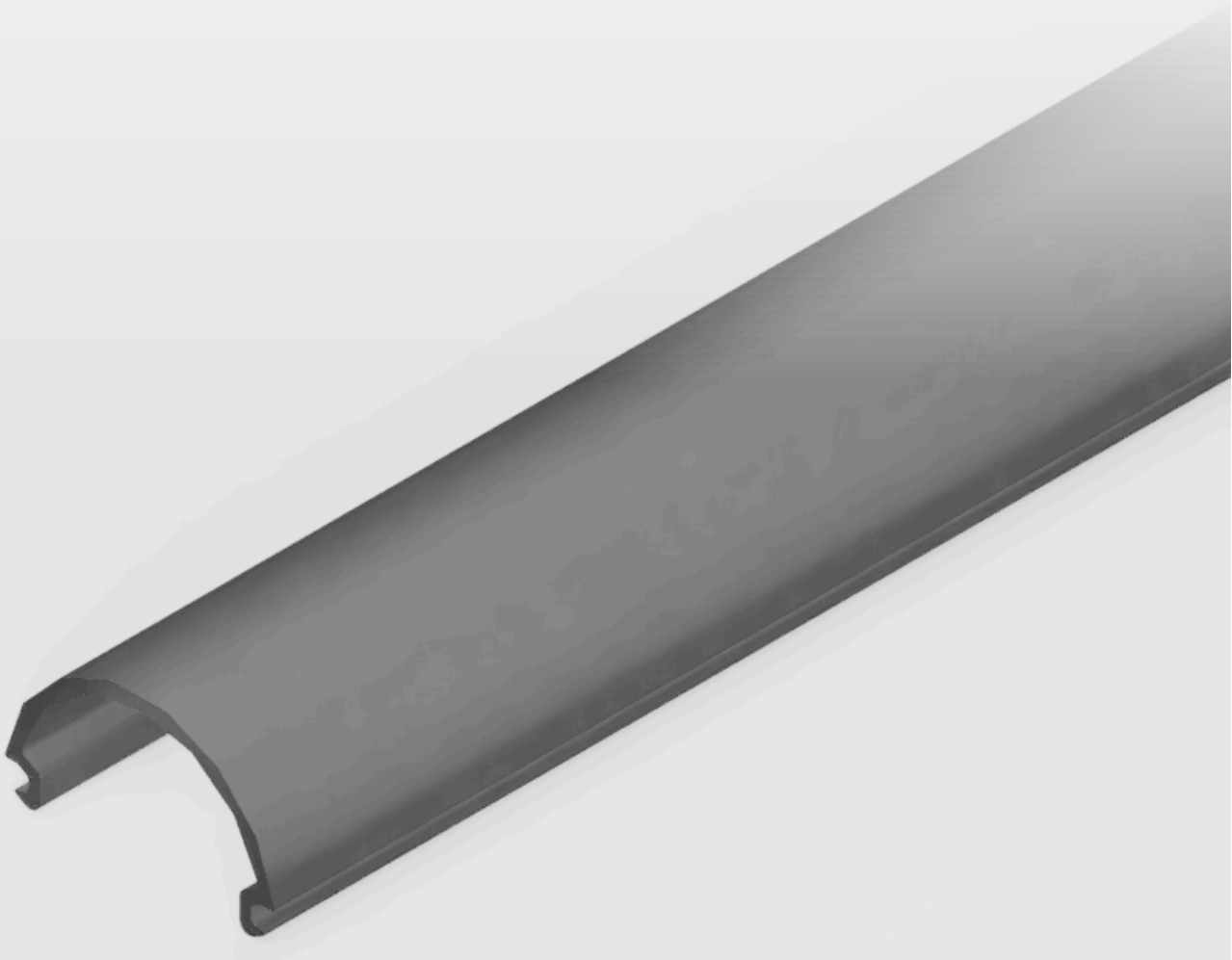

Datasheet

13-11-2026

www.tagra-lighting.co.uk

support@tagra-lighting.co.uk

Tagra | SL20 | 19.4x11.2mm | LED Diffuser | Dome | Black | 3M

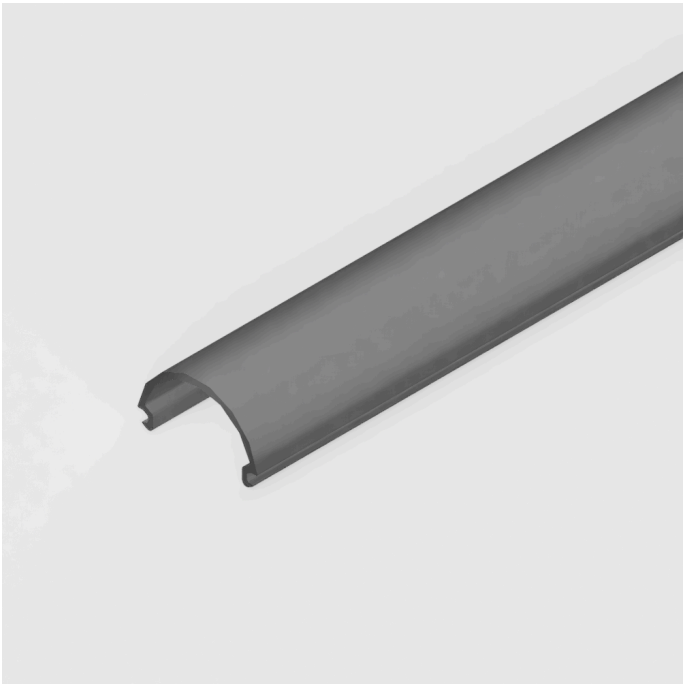

Length	Material	Warranty
3m	PC	5 Years

SKU: 2016-3M-D-BLK

ITM: ITM000942

Key Features:

- **Product Length:** 3m
- **Diffuser Colour:** Black
- **Dimensions (W x H):** 19 x 19mm

Mechanical Data			
Diffuser Shape:	Domed	**Illuminated Surface Width:**	19mm
Max. LED Strip Light Width:	16mm	**Min. Pitch for Diffusion:**	120
No. of Rows for Non-Spotting:	1	**Product Weight:**	105g
Dimensions (LxWxH):	3000 x 19 x 19mm		

Photometric Data			
Beam Angle:	110°	**Diffuser Colour:**	Black

Environmental Data			
Body Material:	Polycarbonate	**Ingress Protection (IP):**	IP20

Dimension Drawing

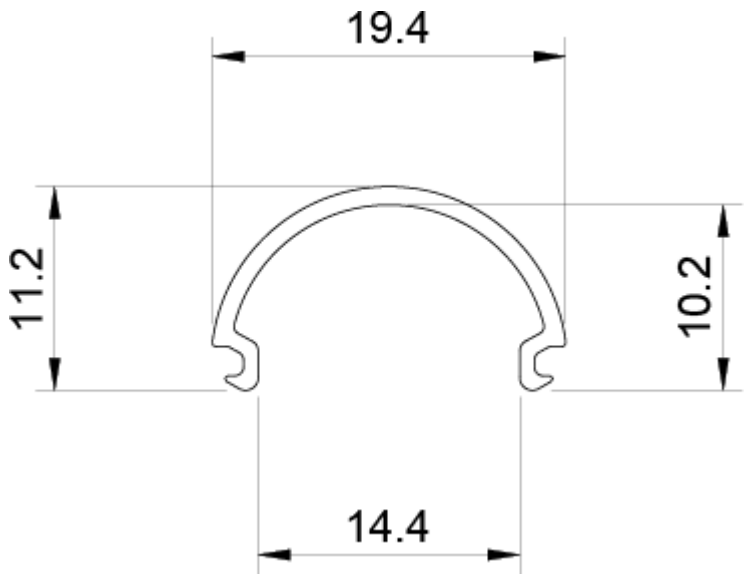

Packaging Data

Items / Sets Per Pack:	1	**Packaging Height:**	12mm
Packaging Length:	3000mm	**Packaging Width:**	19mm
Packaging Weight:	105g		

Disclaimer

Tagra Lighting have taken reasonable care to ensure that the information in this datasheet is accurate at time of publication however it should be noted that all specifications are subject to tolerance. Descriptive specifications such as colour are subjective. Tagra Lighting reserve the right to update specifications without notice. The information in the datasheet may only be relied on by customers of Tagra Lighting in accordance with applicable terms and conditions.

Tagra Lighting is a trading name of T.R Ventures Limited, a company incorporated in England with registered number 07757720. Our registered office is Unit 2, Southfield Industrial Estate, Trafford Park, M17 1SJ.

www.tagra-lighting.co.uk

support@tagra-lighting.co.uk